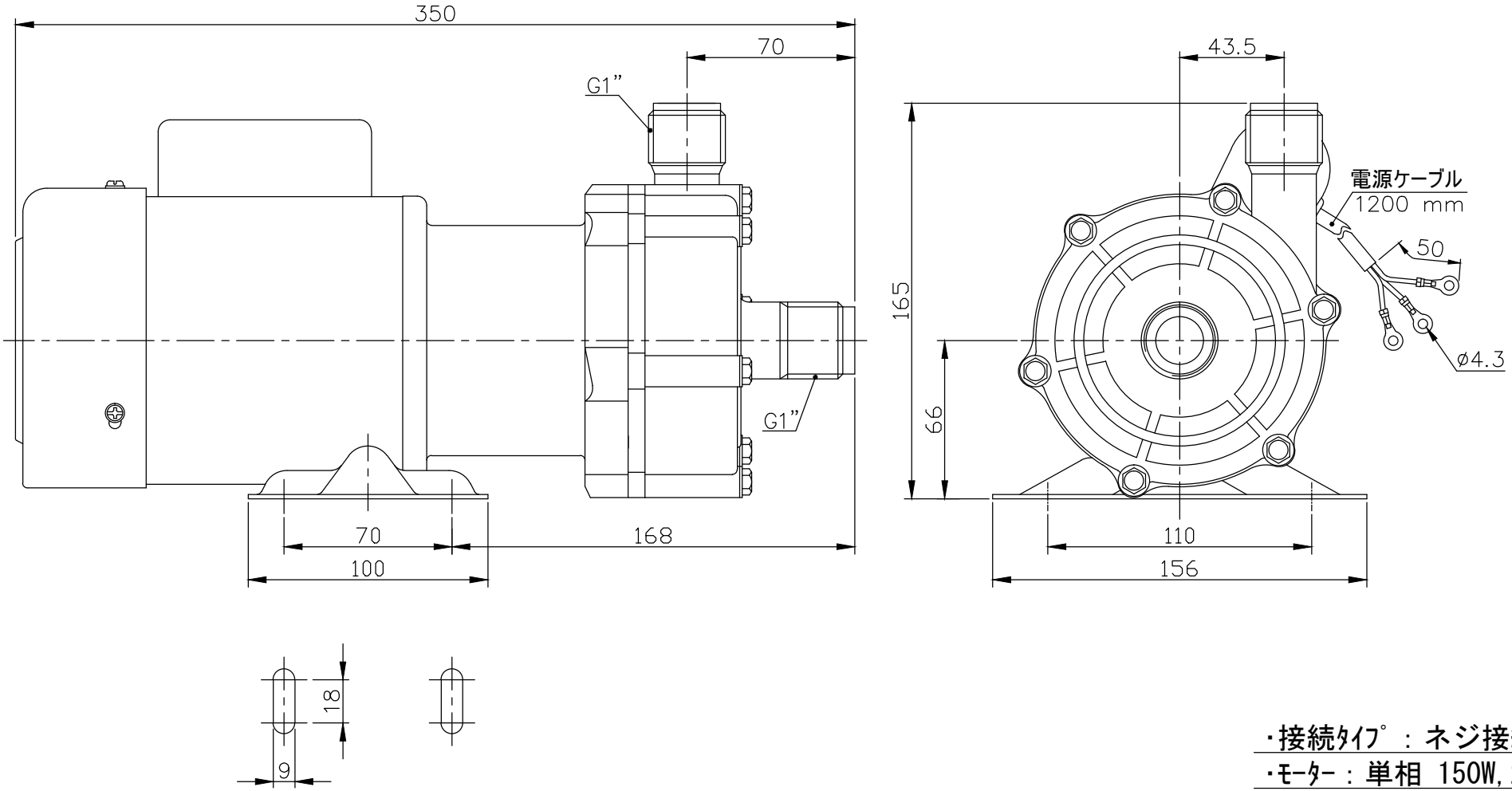

・接続ﾀｲﾌﾟ：ネジ接続

・ﾓｰﾀｰ：単相 150W,2P

TITLE	HDG-150PXZ-T ,150PFZ-T	CHECKED BY	H26.6
PLAN NAME	寸 法 図	DRAWN BY	Lee
DWG.No.	S-1195MG-23T	SCALE	1/2.5
HAYASHI KAKOHKI MFG.CO.,LTD.			

・ﾈｼﾞ：IN.G1", OUT.G1"